SF6250

Laser diode driver

Datasheet &
User Manual

Before powering on your driver, read this manual thoroughly.
If you have any doubt or suggestion, please do not hesitate to contact us!

Maiman Electronics
e-mail: info@maimanelectronics.com
web site: www.maimanelectronics.com

V1.1.0 – 2023

v0.1.2:

Added paragraphs «Overall dimensions and weight» and «Functional schemes»

v0.1.3:

Paragraph «Warranty», error-triggered fall-time values (Paragraph «Electrical characteristics»), examples of digital commands, and correction in paragraphs «how to get started» and «Digital control description (extended)» was added.

v1.1.0:

Replacement of components with analogues, without functional changes, added RS-485, calibrated output current for the new measuring instruments.

Table of content

1. Features 4
2. Applications 4
3. Description 4
4. Package set 4
5. Overall dimensions and weight 4
6. Absolute maximum ratings 4
7. Recommended operating conditions 5
8. Power supply requirements 5
9. Electrical characteristics 5
10. Typical Performance Characteristics 7
11. Functional schemes 10
12. Pin and terminal functions 11
13. Analogue control description 14
14. How to get started 15
15. Cooling 15
16. Internal protections 15
17. Software 15
18. Digital control description 15
19. Digital control description (extended) 20
20. Mechanical dimensions 23
21. Warranty 23

1. Features

- **Low current ripple**
- **No need to adjust voltage**
- **Soft-start**
- **Adjustable overcurrent limit**
- **Thermal warning and shutdown**
- **Reverse current protection**
- **Crowbar circuit protection**
- **Universal controls**
- **NTC thermistor input**
- **Own software**

2. Applications

- **Supplying laser diodes, bars and arrays**
- **Supplying high power LED arrays**

3. Description

The SF6250 is a non isolated DC/DC SMPS (POL) with constant current output. Driver produces high stability and low ripple current. Protection features include an over current protection with adjustable limit, soft-start, thermal warning and shutdown, reverse current protection and crowbar circuit protection. This means the SF6250 can safely drive non linear and current quality sensitive loads like laser diodes and LEDs.

The driver can be controlled by analogue or digital signals.

SF6250 is available in thermal enhanced quarter-brick package with aluminum base plate to aid thermal dissipation. Driver can be mounted on any thermal conductive surface enough to dissipate driver losses.

4. Package set

- Driver – 1 pcs
- 50 cm ribbon cable with one 6-pin connector – 1 pcs
- 50 cm ribbon cable with one 8-pin connector – 1 pcs
- 50 cm ribbon cable with one 14-pin connector – 1 pcs
- Wires fixing set – 1 pcs
- Datasheet & User Manual – 1 pcs

5. Overall dimensions and weight

The driver has overall dimensions of 61 x 106.7 x 26 mm and a weight of 394 g.

6. Absolute maximum ratings*

	MIN	MAX	UNIT
Vin+ to Vin-	-0.3	16	V
Operating temperature	-40	50	°C
Analogue control pins to GND	-0.3	5.5	V
RS-232 RXD to GND	-25	25	V
RS-232 TXD to GND	-13.2	13.2	V
UART RXD to GND	-0.3	5.5	V
UART TXD to GND	-0.3	5.5	V
RS-485 A	-0.3	5.5	V
RS-485 B	-0.3	5.5	V

*Stresses beyond those listed under absolute maximum ratings may cause permanent damage to the device. These are stress ratings only, which do not imply functional operation of the device at these or any other conditions beyond those indicated under recommended operating conditions. Exposure to absolute-maximum-rated conditions for extended periods may affect device reliability.

7. Recommended operating conditions

	MIN	MAX	UNIT
Input voltage (V_{in})	10	15	V
Operating temperature	-10	40	°C
Analogue control pins to GND	0	5	V
RS-232 RXD to GND	-12	12	V
RS-232 TXD to GND	-12	12	V
UART RXD to GND	0	5	V
UART TXD to GND	0	5	V
RS-485 A	0	5	V
RS-485 B	0	5	V

8. Power supply requirements

The driver requires a DC power supply with line regulation ± 1%. The power supply must be able to cover the driver output power and losses. Nominal input voltage 12V. Recommended power supply: Mean well RSP-1500-15, 2 pcs in parallel connection.

Use wires as short as possible. Use wire cross-section appropriate for operating current. Minimum cross-section is 10A per mm^2. For best performance, use 5-7A per mm^2.

ATTENTION! Do not use any relay between power supply and driver. When using a relay, voltage surges may occur and driver may fail.

9. Electrical characteristics

PARAMETER	TEST CONDITIONS	MIN	TYP	MAX	UNIT
OUTPUT					
Output voltage (V_{out})		1		0.67*V_{in}	V
Output current (I_{out})		0		250	A
Current ripple			40	80	mA
Pulse rate	QCW-mode	0.1		100	Hz
Pulse duration	Set by RS-232 or UART	1		5000	ms
	Set by analogue pin	0.5		1/F	
Rise time (Soft-start time)	I_{out} = 250A	250	450	700	us
	I_{out} = 125A	300	500	800	us
Fall-time (Stop time)		400	800	1200	us
Error-triggered fall-time (Stop time)		7		200	us
Output capacitance			3600		uF
INPUT					
Vin quiescent current	V_{in} = 12V, no AUX load	100	130	150	mA
Input capacitance			370		uF
CONTROLS					
Enable pin low threshold				1	V
Enable pin high threshold		2.3			V
Interlock pin threshold				1	V
Interlock pin pull-up resistance			10		kΩ
Current set pin voltage vs. output current			50		A/V
Current set step	Set by RS-232 or UART		0.1		A

Current set accuracy[1]	70A < I_{out} < 170A		+/- 5		%
	170A < I_{out} < 250A		+/- 1		%
Current set calibration		- 5		+ 5	%
AUX SUPPLY					
+/- 15V accuracy			+/- 2		%
+/- 15V output current			20	30	mA
5V accuracy			+/- 1.5		%
5V output current			200	300	mA
INTERNAL MEASURMENTS					
Internal measurements accuracy			+/-2		%
Current monitor pin voltage vs. output current			50		A/V
Voltage monitor pin voltage vs. output voltage			1		V/V
External sensor temperature	NTC 10k	-10		150	°C
POWER DISSIPATION					
Driver losses	V_{in} = 14V, I_{out} = 250A	80	100	120	W
PROTECTIONS					
Crowbar clamp resistance			2.3	2.8	mΩ
Crowbar clamp response time			100	200	ns
Over-temperature warning threshold temp			60		°C
Over-temperature warning hysteresis			2		°C
Over-temperature shut down threshold temp			80		°C
Over-temperature shut down hysteresis			22		°C

[1] See more at regulation characteristic (Figure 5).

10. Typical Performance Characteristics

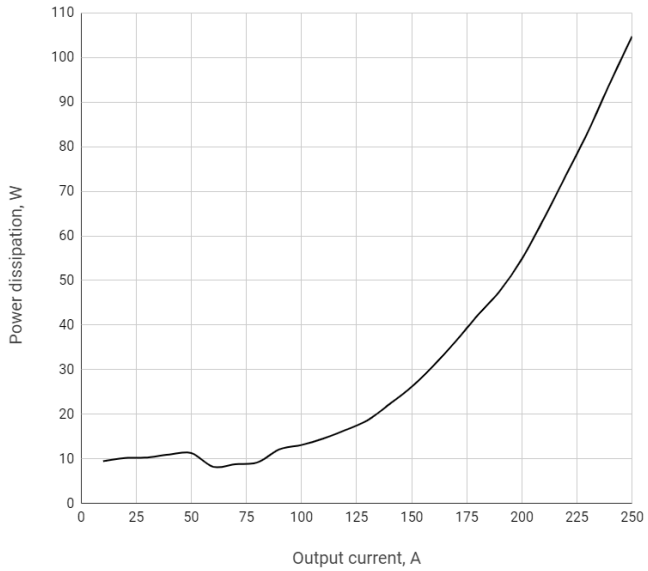

Figure 1 – Power dissipation vs. output current at full load

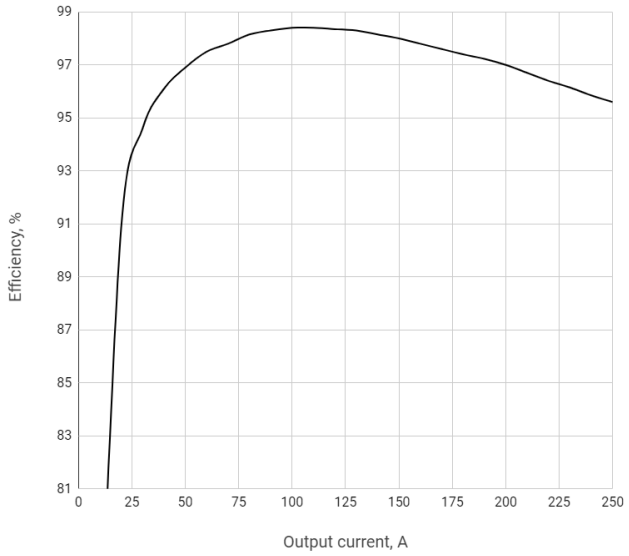

Figure 2 – Efficiency vs. output current at full load

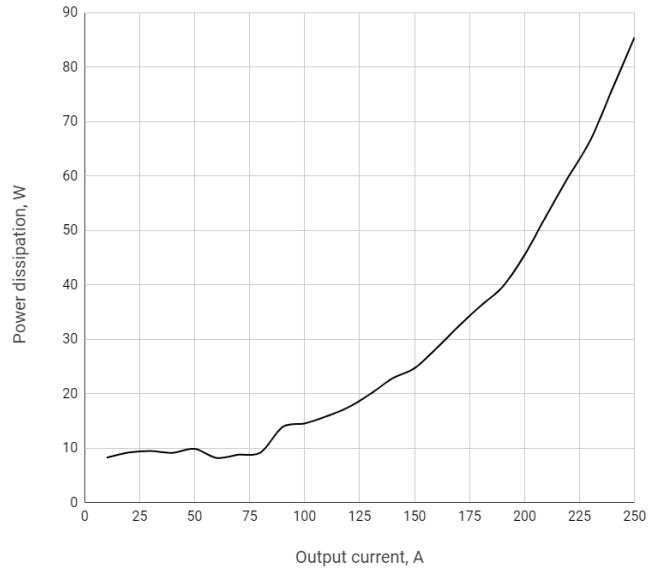

Figure 3 – Power dissipation vs. output current at light load

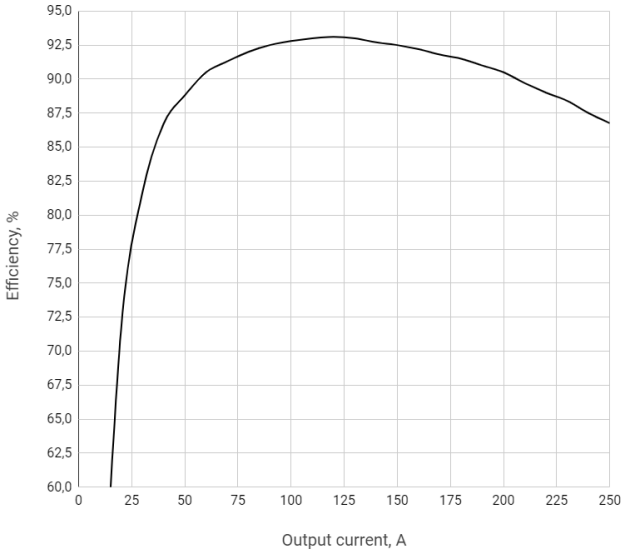

Figure 4 – Efficiency vs. output current at light load

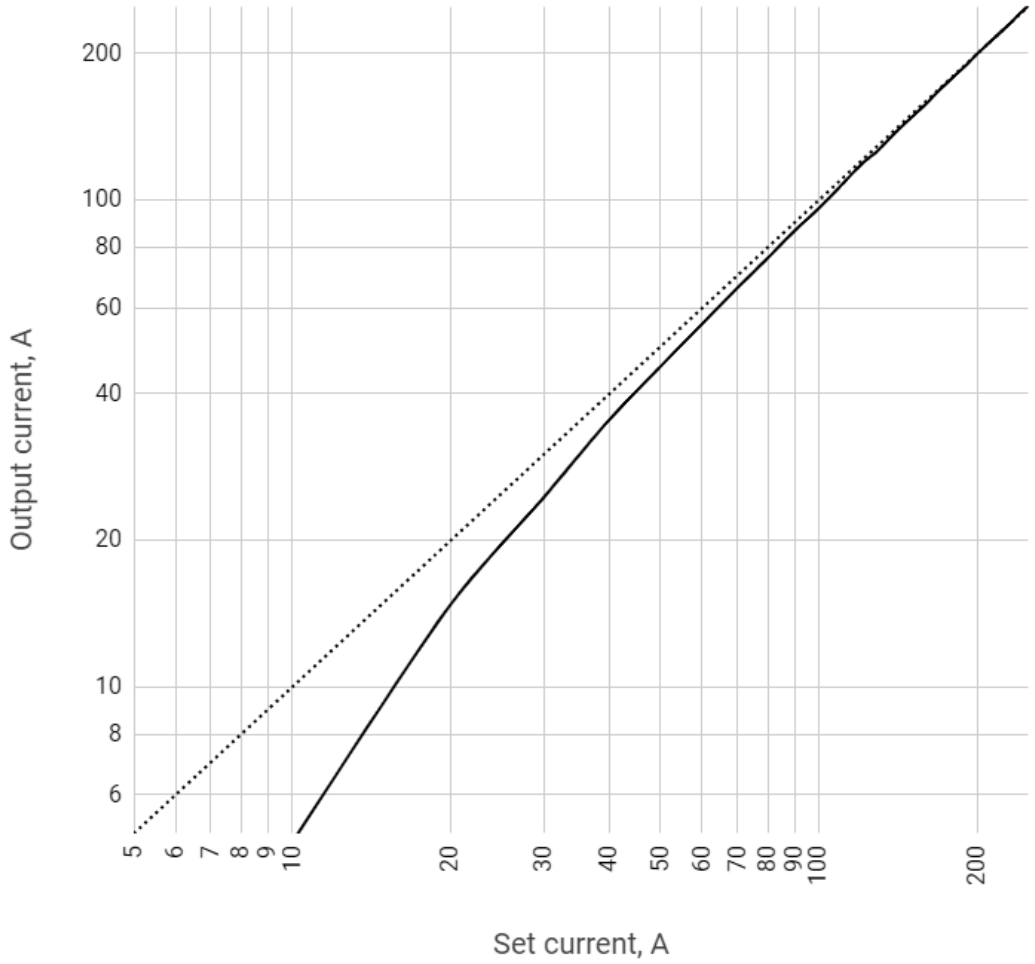

Figure 5 – Regulation characteristic: dotted – ideal, solid – real

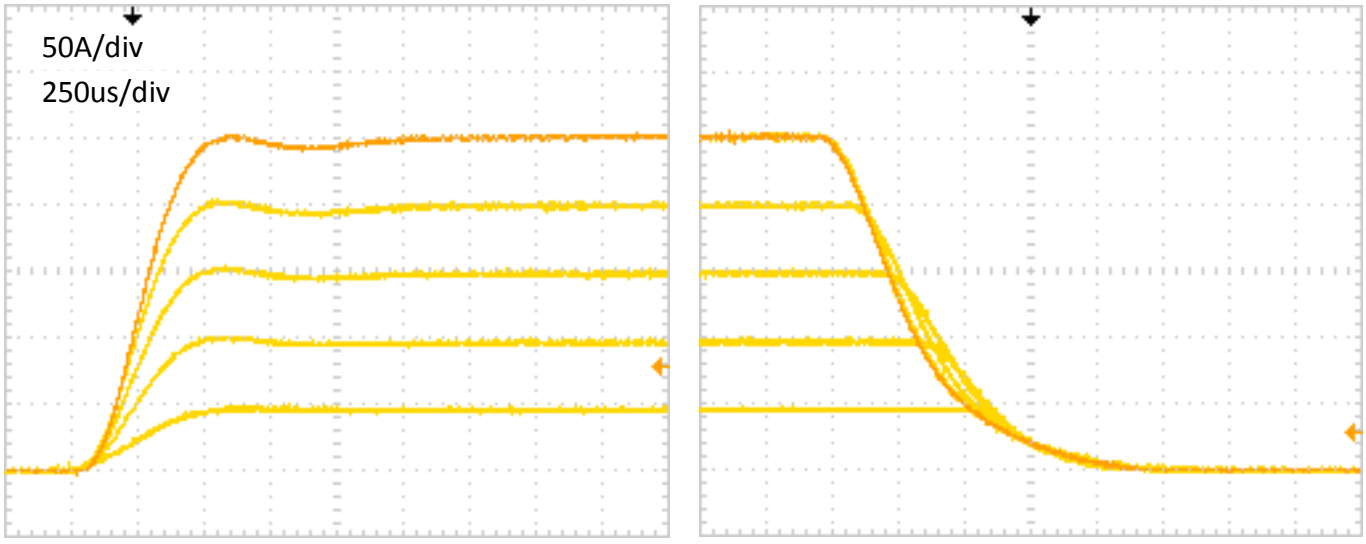

Figure 6 – Typical start up and stop sequence at V_{out} = 0.9-1.3V

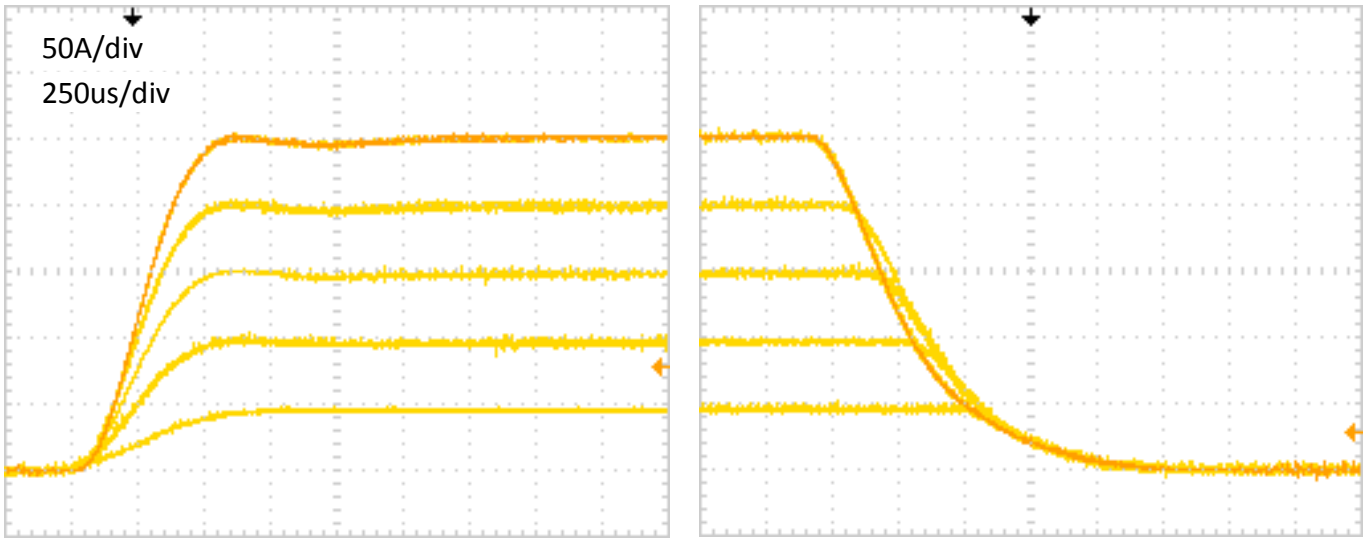

Figure 7 – Typical start up and stop sequence at V_{out} = 1.8-2.3V

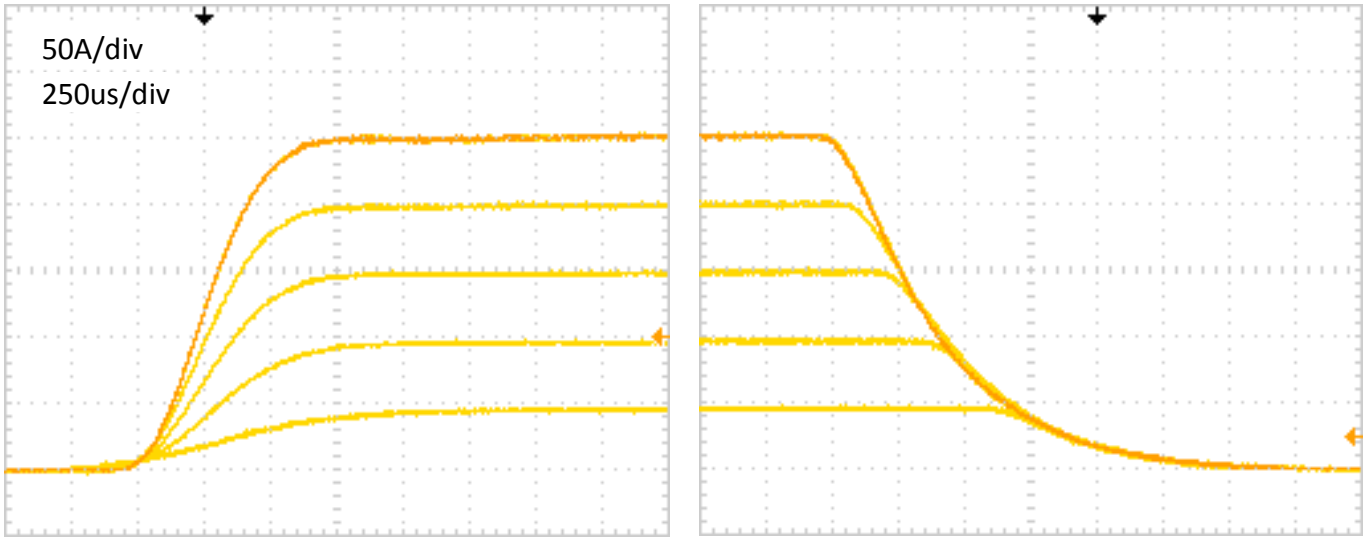

Figure 8 – Typical start up and stop sequence at V_{out} = 4.3-5.4V

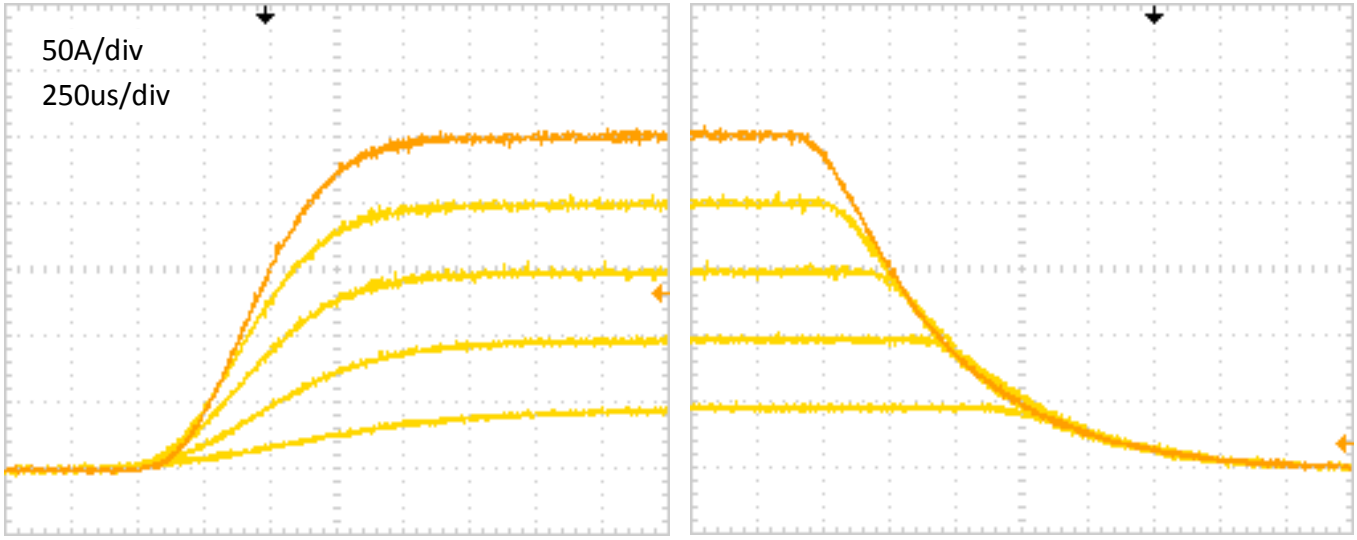

Figure 9 – Typical start up and stop sequence at V_{out} = 6.9-9.0V

11. Functional schemes

Analogue interface

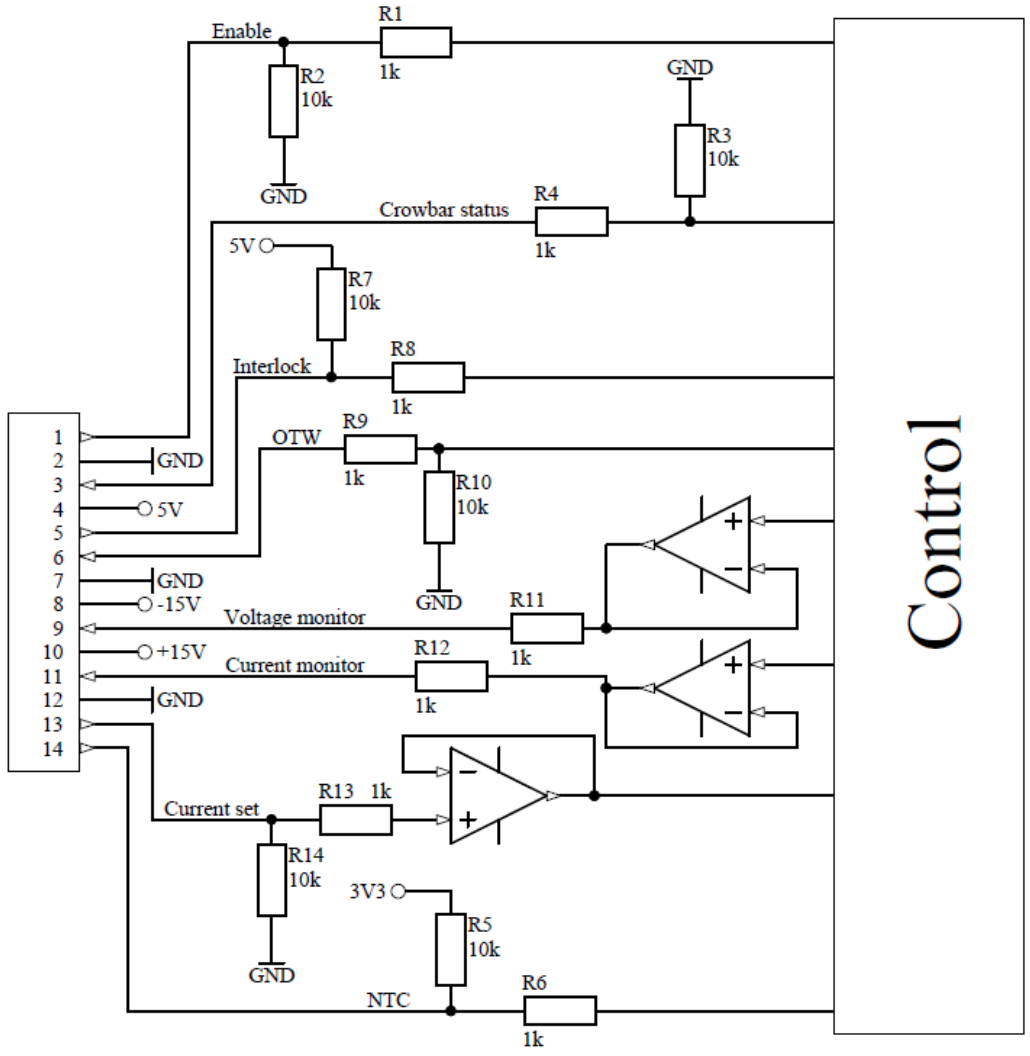

Figure 10 – Analog interface functional scheme

Power unit

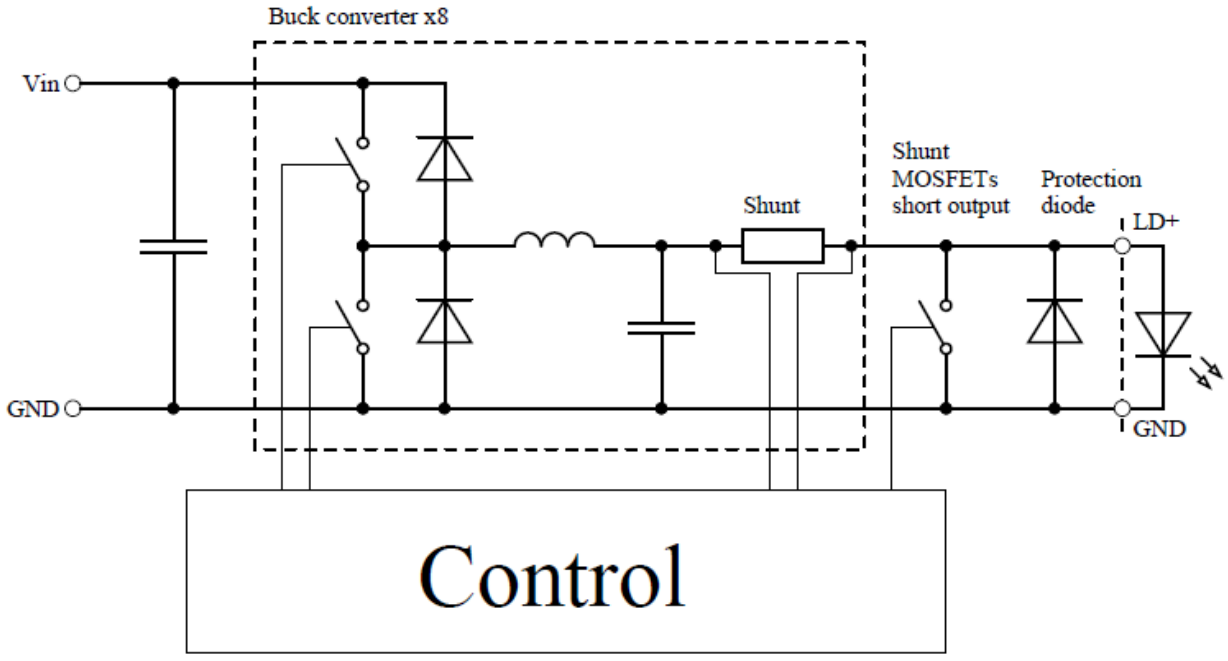

Figure 11 – Power unit functional scheme

12. Pin and terminal functions

Please, note polarity!

Never ground any lead of the output,

this may cause permanent damage to the laser diode and the driver!

Never use any grounded probes (e.g. from the oscilloscope) at the output!

Control pins are not isolated!

Do not remove bars from the driver!

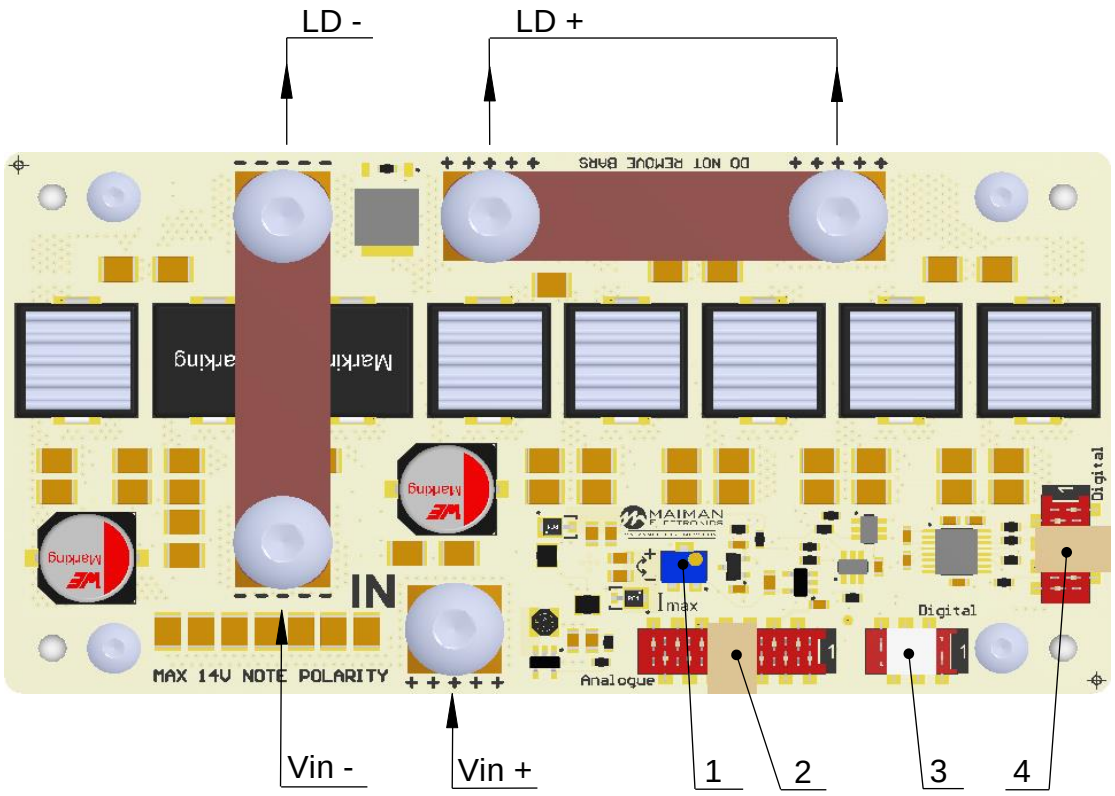

Figure 12 – Terminals and controls

Terminals

Terminal	Description
Vin +	Connect to the positive terminal of the power supply. Please note polarity!
Vin -	Connect to the negative terminal of the power supply. Please note polarity!
LD +	Connect to the laser diode anode. Please note polarity! **Grounding this terminal may cause permanent damage to the driver.**
LD -	Connect to the laser diode cathode. Please note polarity! **Grounding this terminal may cause permanent damage to the laser diode.**

Controls

№	Description
1	Current limit adjustment potentiometer (adjustment from zero to maximum occurs in 12 turns)
2	Analogue control connector
3	RS-485 digital control connector
4	UART, RS-232 digital control connector

UART, RS-232 digital control connector

Wurth WR-MM 690157000872 or TE Connectivity 215083-8

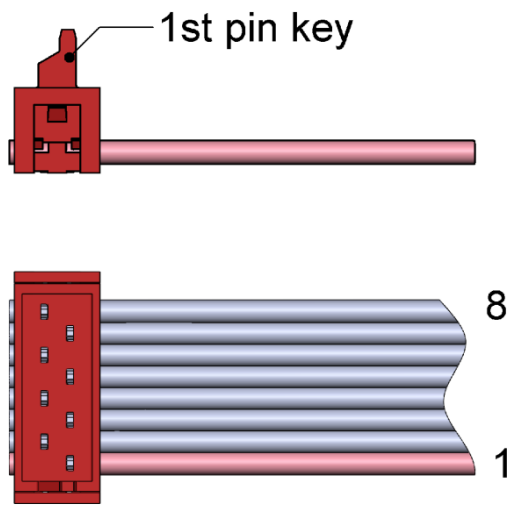

Pin	Description
1	UART RXD
2	RS-232 RXD
3	UART TXD
4	RS-232 TXD
5	+5V auxiliary (duplicates pin 4 of analogue control connector)
6	Interlock (duplicates pin 5 of analogue control connector)
7	Crowbar status (duplicates pin 3 of analogue control connector)
8	**GND** (connected to Vin- terminal)

RS-485 digital control connector

Wurth WR-MM 690157000672 or TE Connectivity 215083-6

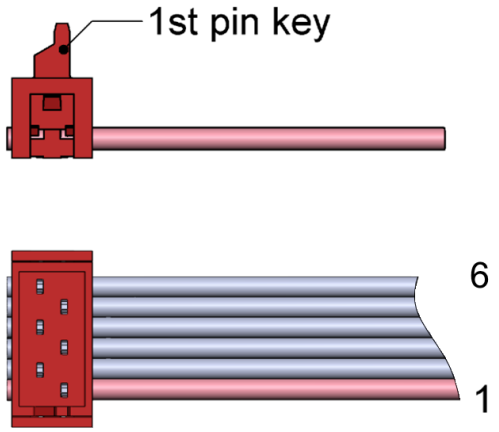

Pin	Description
1	RS-485 A
2	RS-485 B
3	GND
4	Not connected
5	Not connected
6	GND

Analogue control connector

Wurth WR-MM 690157001472 or TE Connectivity 1-215083-4

PIN	I/O	Name	Description
1	I	Enable	High = operates; Low = stop. Internally pulled down. TTL or CMOS signals only.
2		**GND**	Connected to Vin- terminal.
3	O	Crowbar status	High = fault; Low = normal operation. Internally pulled down.
4		+5V	Auxiliary +5V power supply. Up to 200mA output current capability.
5	I	Interlock	Open = locked; Low = operates. Internally pulled up.
6	O	Over-temperature warning	High = t° > 60°C; Low = t° < 58°C. Internally pulled down.
7		**GND**	Connected to Vin- terminal.
8		-15V	Auxiliary -15V power supply. Up to 20mA output current capability.
9	O	Voltage monitor	0-10V = 0-10V at the output.
10		+15V	Auxiliary +15V power supply. Up to 20mA output current capability.
11	O	Current monitor	0-5V = 0-250A at the output.
12		**GND**	Connected to Vin- terminal.
13	I	Current set	0-5V = 0-250A at the output.
14		NTC Interlock	Connect NTC thermistor 10k between this pin and GND.

13. Analogue control description

Enable

The enable pin is active high 3.3V and 5V compatible logic input. Driver operates when enable pin is high. To ensure correct start-up without overshoot, the soft-start sequence initiates when the enable pin becomes high.

The enable pin can be used for QCW operation. The output may be pulsed by applying a TTL square signal to enable pin.

Crowbar status

Crowbar status pin reports the status of the protection shorting crowbar clamp across the output. The crowbar will short the output while over-current shutdown and over-temperature shutdown. While the protection shutdown the enable pin is ignored. Disconnect the driver from power to reset the protection status.

Interlock

The Interlock pin must be connected to GND in order for output current to be delivered. It can be used for external interlock e.g. door or over-temperature switches.

Over temperature warning

When the temperature of driver PCB exceeds 60°C the over-temperature warning will go high to indicate driver is in danger of shutting down due to over-temperature condition. When temperature of driver PCB exceeds 80°C, the driver will stop. The driver can be restarted when the temperature drops to 58°C.

Voltage monitor

The output voltage of the driver can be monitored by voltage monitor. 0-10V = 0-10V with +/-2% accuracy. The voltage is measured between LD+ and LD- terminals.

Current monitor

The output current of the driver can be monitored by current monitor. 0-5V = 0-250A with +/-2% accuracy.

Current set

The driver output current is set by applying an analog signal to the current set pin. 0-5V = 0-250A.

The current set pin can be used for analogue modulation by applying sign, square or ramp signal with the DC component. Analogue modulation amplitude depends on frequency. Please, control the output current while using this feature.

If you use arbitrary/function generator or lab PS for current set, make sure it is in High Z mode. Please, control the current set and current monitor pin voltages while getting started.

NTC Interlock

Thermistor connection. Allows you to measure the temperature of a laser or other devices. The measurement result is readable by the digital interface. Set upper and lower limits of the temperature at the outlet of which driver operation is blocked. When the temperature returns to the specified range, the driver operation resumes.

14. How to get started

1. Unpack your driver;
2. Connect a dummy load (e.g. a Schottky diode) to the LD- and LD+ terminals. Please note polarity;
3. Connect the controls (analogue and/or digital);
4. Connect the power supply. Please note polarity;
5. Rotate the current limit potentiometer clockwise several times;
6. Turn on the power supply;
7. Set the current equal to the desired current limit threshold;
8. Enable the driver;
9. Rotate the potentiometer counterclockwise slowly while the crowbar status pin becomes high;
10. Restart the power supply to reset protection;
11. Make sure the over-current protection limit is set right;
12. Make sure that all controls are working;
13. Turn off the power supply and disconnect a dummy load;
14. Connect the laser diode to the LD- and LD+ terminals. Please note polarity.

15. Cooling

The driver produces up to 120W of losses. Thus the base plate has to be mounted on a thermal conduction surface to ensure proper operation and prevent an over-temperature shutdown. If the conduction cooling is not enough an additional cooling may be achieved by placing the driver into the airflow of a fan.

16. Internal protections

Several security features protect the laser diode and driver from damage. Reverse diode protects the laser diode from reverse currents. In case of an over-current or an over temperature condition, the control logic disables the driver and the output shorts by a crowbar clamp. A soft-start mechanism slowly raises the current at startup to protect the laser diode against current overshooting.

17. Software

We offer own software to control driver. You can find it at maimanelectronics.com in the downloads section of the product page. Or contact us at info@maimanelectronics.com.

18. Digital control description

When the input voltage applied the driver is always in “analogue current set, external enable and allowing interlock” state. Any other state should be set any time after powering the driver if needed.

Default serial port settings:

Baud rate	Data bits	Stop bits	Parity	Flow control
115200	8	1	none	none

Data exchange between the driver and the PC is only initiated by the PC. All commands are sent in plain text format. All commands are sent with prefix. Number of command follows the prefix without any symbols. If there is the value after the command they separates with “space” symbol. The command ends with “carriage return” symbol.

The format of the command to set the value (P-type);

Number of byte	Value	Comment
1	P (50h)	Set prefix
2-5	Number of the parameter	Hex-number of the parameter. For example, 0100h
6	‘space’ symbol (20h)	
7-10	New value of the parameter	Hex-value of the parameter. For example, 0000h
11	‘return carriage’ symbol<CR> (0Dh)	End of the command

The device does not respond to P-type commands by default. (see section “the protocol extension”)

You can request the value of parameter by the J-type command. The device will return a value of requested parameter.

The format of the command to get the value (J-type)

Number of byte	Value	Comment
1	J (4Ah)	Request prefix
2-5	Number of the parameter	Hex-number of the parameter. For example, 0100h
6	‘return carriage’ symbol<CR> (0Dh)	End of the command

The format of the response

Number of byte	Value	Comment
1	K (4Bh)	Response prefix
2-5	Number of the parameter	Hex-number of the requested parameter
6	‘space’ symbol (20h)	
7-10	Returned value of the parameter	Hex-value of the parameter
11	‘return carriage’ symbol<CR> (0Dh)	End of the command

If the device could not recognize a command, it returns an error message with error code.

The format and codes of errors

Error (returned command)	Reasons (one or few)
E0000	1) Internal buffer of device is overflowed. 2) Cannot find <CR> (0x0D) or\and <LF> (0x0A). 3) Format of command is invalid.
E0001	1) Unknown command (it does not P- or J-type command). 2) The device failed to correctly interpret a command.
E0002	The CRC of received command (see section “the protocol extension”).
K0000 0000	Request or set the parameter that does not exist.

Available parameters and its description

Action			R/W	HEX-number of parameters
Frequency (0.1 Hz)	Value		R/W	0100
	Minimum		R	0101
	Maximum		R	0102
Duration (0.1 ms)	Value		R/W	0200
	Minimum		R	0201
	Maximum		R	0202
Current (0.1 A)	Value		R/W	0300
	Minimum		R	0301
	Maximum		R	0302
	Measured value		R	0307
Current set calibration (0.01%)[2]	Value		R/W	030E
Voltage (0.1 V)	Measured value		R	0407
State of the device	Start (Enable)	0008h	W	0700
	Stop (Disable)	0010h		
	Internal current set	0020h		
	External current set	0040h		
	External Enable	0200h		
	Internal Enable	0400h		
	Allow Interlock	1000h		
	Deny Interlock	2000h		
	Deny NTC Interlock	4000h		
	Allow NTC Interlock	8000h		
State of the device (bit mask)	0 bit	1 – Device is powered on (always = 1)	R	0700
	1st bit	0 – Stopped; 1 – Started		
	2nd bit	Current set: 0 – External; 1 – Internal		
	4th bit	Enable: 0 – External; 1 – Internal		
	6th bit	External NTC Interlock: 0 – Allowed; 1 – Denied		
	7th bit	Interlock: 0 – Allowed; 1 – Denied		
Serial number	Return the hex-value of the serial number		R	0701

[2] Default – 100.00% (2710h), calibration range is from 95.00% (251Ch) to 105.00% (2904h).

Device model and version ID	Return identification number		R	0702
Information about parameters that you can change (bit mask)	0 bit	1 – the device supports this option	R	0703
	1st bit	Frequency		
	2nd bit	Duration		
	3rd bit	Current		
Lock status (bit mask)*	0 bit	Reserve	R	0800
	1st bit	Interlock		
	3rd bit	Over current		
	4th bit	Overheat (warning)		
	5th bit	External NTC Interlock		
NTC sensor temperature (0.1°)	Lower limit		R/W	0A05
	Upper limit		R/W	0A06
	Measured value		R	0AE4
	$B_{25/100}$		R/W	0B0E
PCB temperature (0.1°)	Measured value		R	0AF4

*If temperature of the device reaches the over temperature warning threshold the overheat flag will be set. If the device is in over temperature protection state, then it will be set overheat and over current flags together.

Examples

1) For the current value parameter, 0300:

To request value, send the following command:
"J0300" in text or "4a 30 33 30 30 0d" in hex.

Answer will be:
"4b 30 33 30 30 20 30 33 45 38 0d" in hex, "K0300 03E8" in text, 03E8h > 1000 in dec > 10.00 A.

To set new value, for example, 13.5A (0546 in hex), send the following command:
"P0300 0546" in text or "50 30 33 30 30 20 30 35 34 36 0d" in hex.

2) For the state of the device, 0700:

To request value, send the following command:
"J0700" in text or "4a 30 37 30 30 0d" in hex.

Answer will be:
"4b 30 37 30 30 20 30 30 44 35 0d" in hex, "K0700 00D5" in text, 00D5h > 11010101 in bin > Device is powered on, stopped, internal current set, internal enable, denied external NTC Interlock, denied Interlock.

To set new state, for example, allow Interlock, send the following command:
"P0700 1000" in text, "50 30 37 30 30 20 31 30 30 30 0d" in hex.

3) Errors:

If a command with the wrong parameter number was sent, answer will be "K0000 0000" ("4b 30 30 30 30 20 30 30 30 30 0d").

If a command with the wrong format was sent, answer will be an error "E0001" ("45 30 30 30 31 0d").

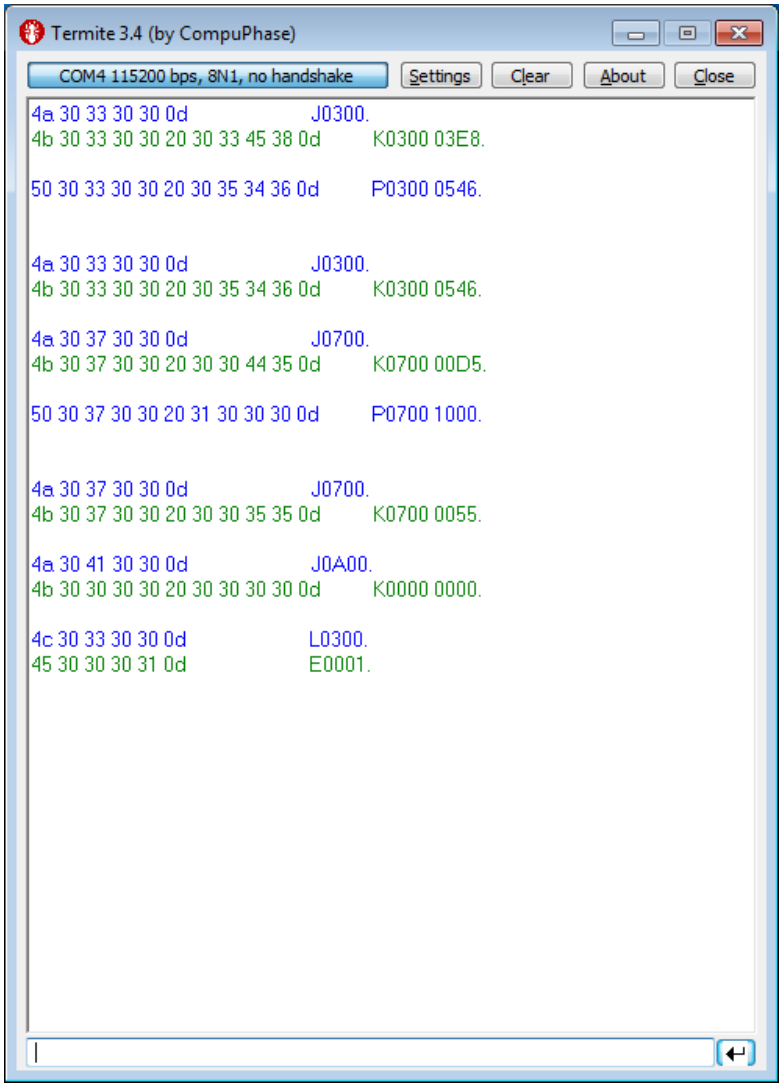

Figure 13 – Screenshot from the Termite terminal with commands and answers

The maximum duration depends on the set value of the frequency. When you change frequency, a new value of the maximum duration is compute automatically. The duration of pulse cannot be less than 2 ms and more than period of frequency minus 2 ms. For low frequencies the duration cannot be more than 5000 ms.

Set the zero frequency to switch the device into CW mode or set not zero frequency value to switch the device into QCW (long pulses) mode. If you try to set a value more or less than limits, then the value will be rounded to limit. Any attempts to set a new state of the device, except “start”, forcibly switch the device to the state “stop”. Some states of the device are mutually exclusive, for example, if you set “Ext. Enable”, then you will not be able to set the state “start”. If you send “start” and “stop” commands to each other, the device will save all parameters in the internal memory. The saving process lasts about 300 ms. In this time the device does not respond to any actions. The device is able to save the next parameters in the internal memory:

- Frequency with limits;
- Duration with limits;
- Current with limits and calibration;
- Temperature limits and $B_{25/100}$;
- Settings of the RS protocol extension (see section «the protocol extension»).

19. Digital control description (extended)

WARNING! *Extended protocol recommend for advanced users only. In addition, it might be use for integration of the device with other devices.*

Use the parameter number 0704h for configure the extended protocol. In extended protocol, you can enable and disable the next options: checksum (CRC 8-bit CCITT), return a new value of parameter after P-type commands, change baud-rate, change protocol-mode (text-plain or binary).

The description of the protocol extension command

Action			**R\W**	**HEX-number of parameters**
Information about the extended protocol	0 bit	1 – the device supports this option	R	0704
	1st bit	Checksum (1 – on, 0 – off)		
	2nd bit	Return a new value for P-type commands (1 – on, 0 – off)		
	3-5 bits	Baud - rate 0 – 2400 1 – 9600 2 – 10417 3 – 19200 4 – 57600 5 – 115200 (default)		
	6th bit	Data exchange mode (1 – binary, 0 –text-plain)		
Configuring of the extended protocol	On checksum (CS)	0002h[3]	W	0704
	Off checksum	0004h[3]		
	Return a new value for P-type commands	0008h[3]		
	Do not return answer for P-type commands	0010h[3]		
	Set new baud-rate(baud)[4]	0100h – 2400 0120h – 9600 0140h – 10417 0160h – 19200 0180h – 57600 01A0h – 115200		
	Binary mode on[5]	0200h		
	Text-plain mode on	0400h		

[3] In binary mode the specified commands are ignored by the device
[4] Here are binary numbers
[5] For more information, see section “binary mode”

Text-plain mode

All commands in text-plain mode should be in ASCII.

WARNING! *If you enable the checksum it will change format of commands. After <CR> symbol you will be write 2 bytes of checksum and last byte will be <LF> (0Ah – "new line" symbol). Checksum is computed for all bytes of command before checksum bytes (including<CR> symbol).*

All answers of the device will also contain a checksum, including K-type and E-type answers. Checksum is computed by CRC-CCITT-8 algorithm. This is the main difference between the format of commands for the extended protocol and standard protocol.

The format of commands for enabled checksum

Number of byte	Value	Comment
1	P,J,K,E	Type of command
2-5	Number of parameter	Hex-number of value
6	'space' symbol (20h)	*(does not use for J and E-type commands)*
7-10	New value of the parameter	Hex-value of parameter *(does not use for J and E-type commands)*
11	'return carriage' symbol<CR> (0Dh)	End of value
12-13	Checksum	CRC checksum of the first 11 bytes *(for J and E-type commands checksum is computed for the first 6 bytes)*, including <CR> symbol.
14	'new line' symbol<LF> (0Ah)	End of command

Possible problems

1. The device waiting for symbol <LF>. If <LF> symbol does not received and buffer is overflowed, then all symbols after overload will be processed as a new command. The device returns an error. In this case, it is recommended to send the <LF> symbol. The device will generate an error and clear the buffer for the next command.
2. All symbols after the <LF> symbol will be processed as a new command.

Binary mode

The binary mode has a significant difference. In this mode, data are exchanged in binary form. Length of any type of command is 8 bytes! In this mode, next options are always enable and you cannot disable it: return a new value of parameter for P-type commands and checksum. The format of binary mode commands is represented in table 8.

The format of binary mode commands

Number of byte	Value	Comment
1	Type of command	50h (P - ascii) – Set a new value of parameter 4Ah (J - ascii) – Get a value of parameter 4Bh (K - ascii) – Answer of the device 45h (E - ascii) – Error
2-3	Number of parameter	Hex-number of parameter
4-5	Value of parameter	Hex-value of parameter. This value is **STRICTLY REQUIRED** in the binary mode. If this value does not make sense, it will be returned as 0000 (K or E-type commands) or you should set it field to any value (for P or J-type commands).
6	'return carriage' symbol <CR> (0Dh)	End of value
7	Checksum	CRC checksum of the first 11 bytes *(for J and E-type commands checksum is computed for the first 6 bytes)*, including <CR> symbol.
8	'new line' symbol <LF> (0Ah)	End of command

20. Mechanical dimensions

All dimensions are in millimeters. Height without wires and screws. You can download the 3D-model of the driver at maimanelectronics.com in the downloads section of the product page.

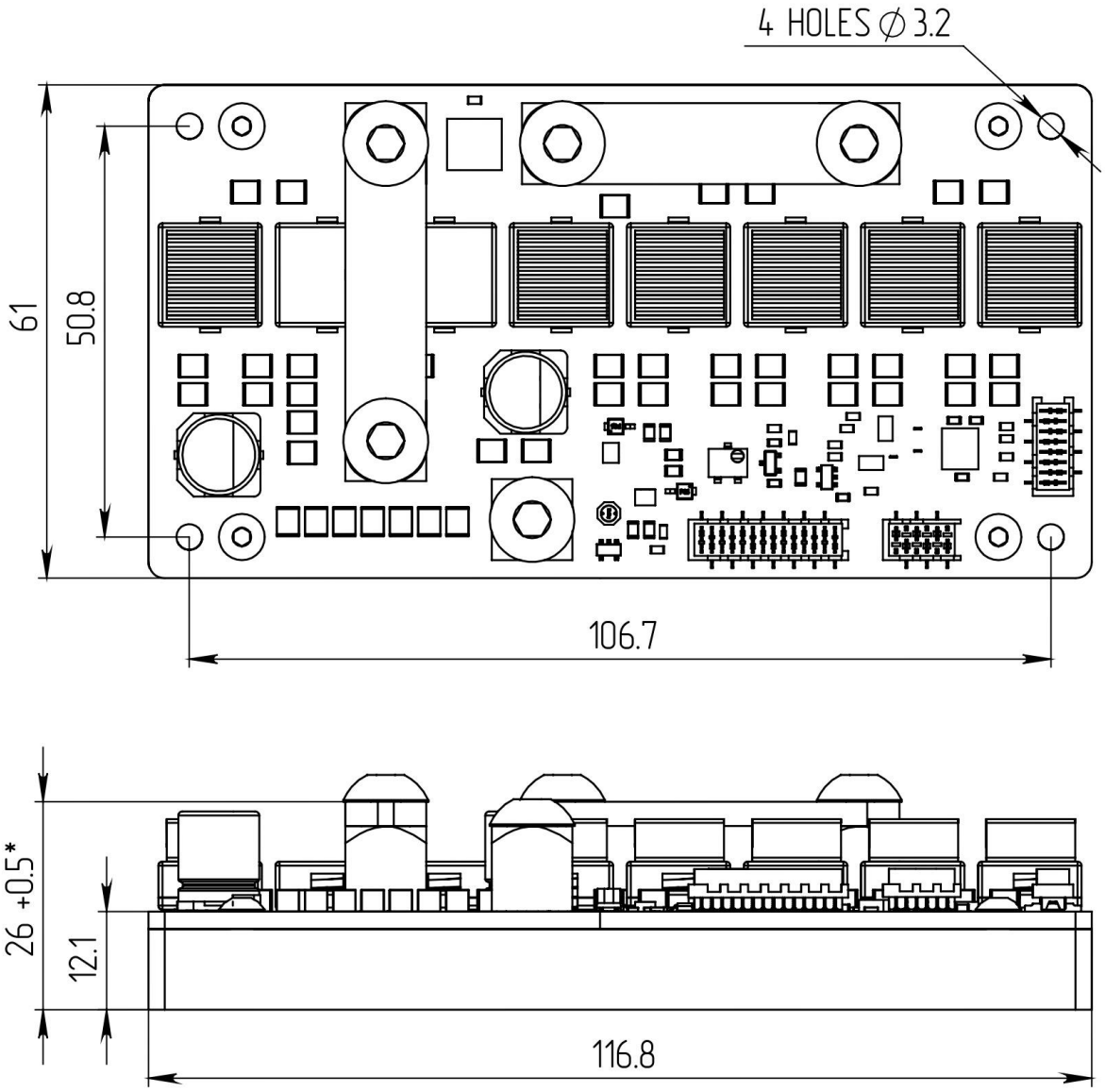

21. Warranty

In compliance with the provisions of Conditions limited warranty the Buyer has the right to guarantee during the one year period. The warranty period comes into effect from the shipping date.

The warranty only concerns products that are applied according requirements and for the applications specified in the manual for the product. If you want to use the products for other applications, contact us by e-mail: info@maimanelectronics.com. This warranty does not apply to damage due to incorrect use, abnormal use, or use in violation of product manual.

See the full warranty conditions on www.maimanelectronics.com/warranty.